VERTICAL SLOPE

TANB =
2TANB =
FACE =
DEVELOP =

IN FACE SLOPE

TANB =
2TANB =

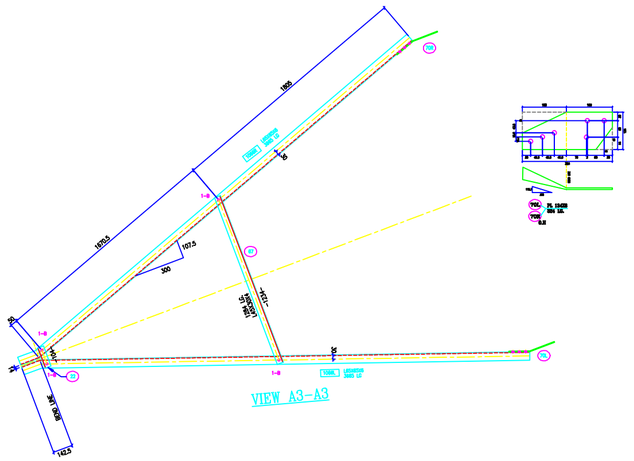

VIEW A3-A3

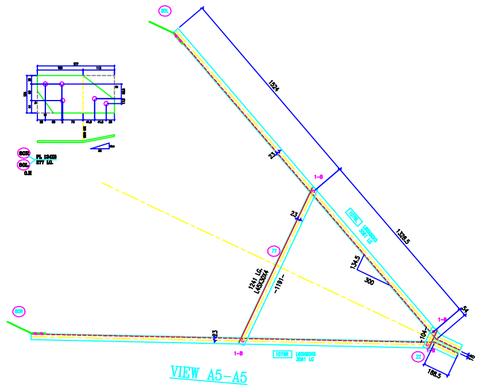

VIEW A5-A5

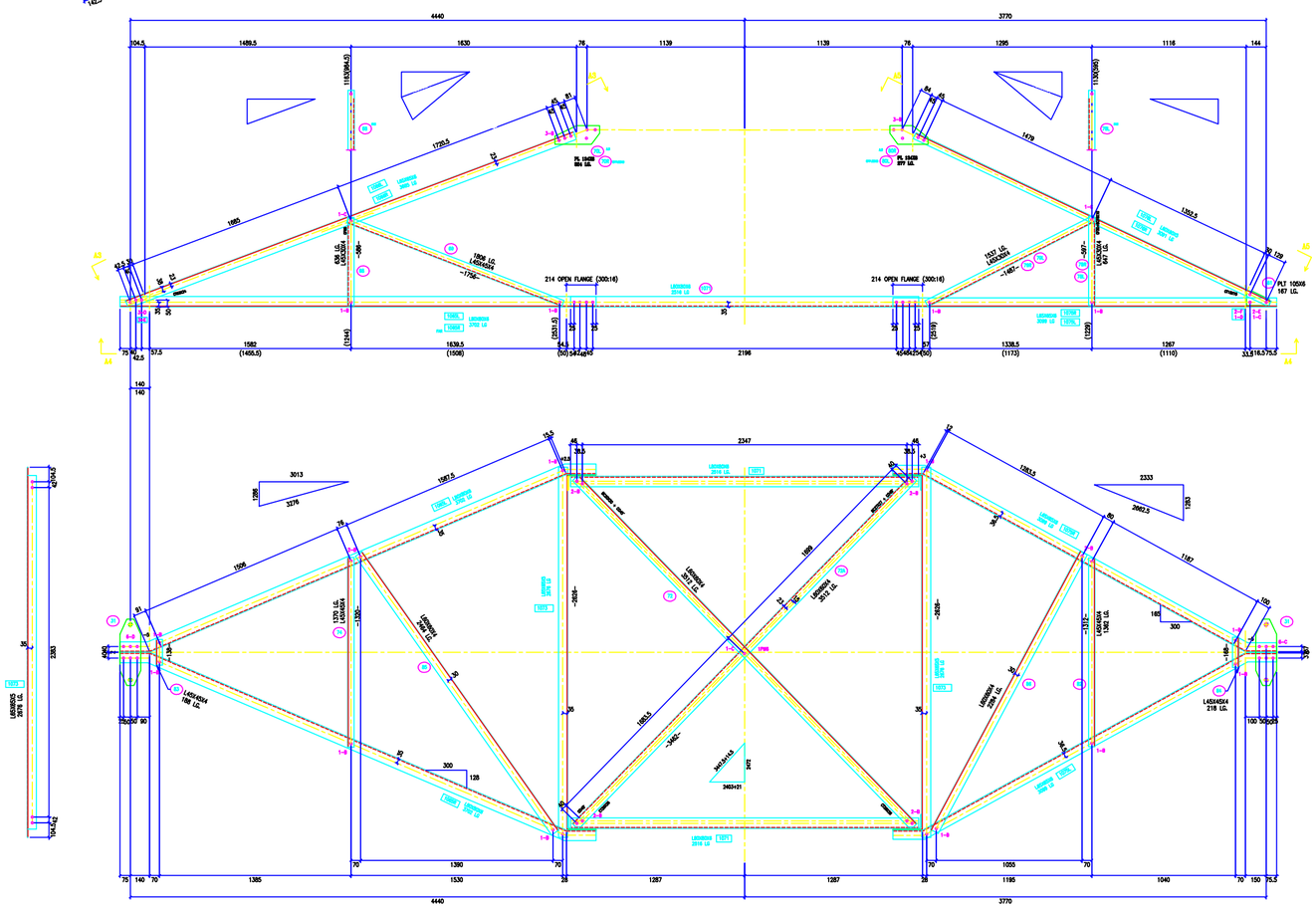

VIEW A4-A4

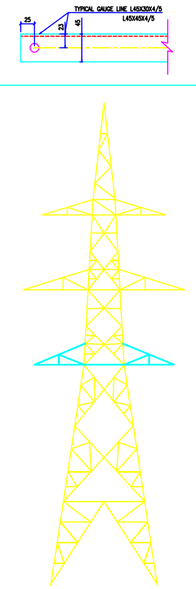

TYPICAL GAUGE LINE L45X30X4/5
L45X45X4/5

BOLTS AND NUTS STATEMENT

TYPE	SIZE (IN MM)	QUANTITY DC	QUANTITY DCR	
B	# 16X35	50	50	
C	# 16X40	12	11	
D	# 16X45	9	7	
E	# 16X50	2	3	
F	# 16X55	–	3	
G	# 16X60	–	–	
H	# 16X65	–	–	
J	# 16X70	–	–	
K	# 16X75	–	–	
L	# 16X80	–	–	
SPRING WASHERS		73	73	
30 O.D PACKING WASHERS # 17.5 MM				
5 mm		2	2	
6 mm		1	1	
8 mm		–	–	
10 mm		–	–	
STEP BOLTS #16 mm X 175mm		–	–	

GENERAL NOTES:

1. ALL DIMENSIONS ARE IN mm UNLESS OTHERWISE SPECIFIED.
2. MILD STEEL BOLT AND NUTS TO IS6639/12427/3.6 QLTY
3. ALL MILD STEEL BOLT AND NUTS ARE TO BE HOT DIP GALVANISED AS PER IS 1367 PART-XIII
4. ALL MILD STEEL SECTIONS SHALL BE OF TESTED QUALITY CONFORMING TO IS 2062 STANDARD
5. GALVANISATION OF TOWER MEMBERS AND FLAT WASHERS AS PER IS 2629
6. ⊙ ALL HOLES # 13.5mm FOR #12mm BOLTS
7. ⊙ ALL HOLES # 17.5mm FOR #16mm BOLTS
8. ⊙ ALL HOLES # 21.5mm FOR #20mm BOLTS
9. ⊙ ALL HOLES # 17.5mm FOR #16mm STEP BOLTS
10. STANDARD SPRING WASHERS ARE TO BE USED UNDER EACH NUT
11. ALL FABRICATED MEMBERS SHALL HAVE PREFIX_____
12. ⊙INDICATES MEMBERS BEING USED AS STEP BOLTS.
13. STEP BOLTS ARE TO BE PROVIDED ON TWO DIAGONALLY OPP. LEGS

MARK NO: 65 TO 86

BIHAR STATE POWER TRANSMISSION COMPANY LTD

DRAWN BY		DESCRIPTION	132KV D/C TOWER TYPE "DC" DETAIL OF BOTTOM `X' ARM		SCALE –
CHECKED BY					
APPROVED BY		DRG NO	132KV-D/C-Struct-Bottom-X-34	SHEET NO 1-1	REV. 0